Dual Energy X-ray Inspection System

ZKX6550

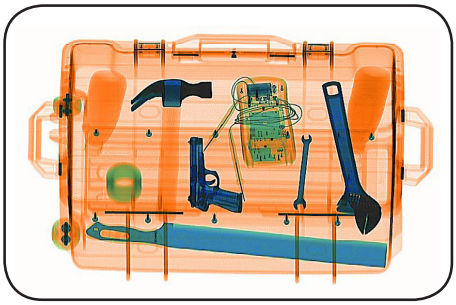

Highlights

- True-color scanning image
- Innovative fingerprint identification
- Widely usable for carry-on baggage

Standard

- Fingerprint Console Board
- Console Desk
- Bidirectional Scan

Optional

- Energy Saving Mode

Introduction

ZKX6550 X-ray inspection system increases the operator's ability to identify potential threats; the device is designed to scan briefcases, carry-on baggage, small cargo parcels.

ZKX6550 uses reliable high quality dual energy X-ray generator. With the superb image algorithm, ZKX6550 could offer clear scanning image, which allows operators to identify potential threat items visually.

ZKX6550 has innovative biometric identify function for operators, improving the security of system and preventing operator from forgetting password.

With ergonomic modern design, ZKX6550 could help operators to identify suspicious items fast and accurately.

Specifications

Tunnel Size	W660mm × H510mm
Speed	0.20 m/s
Height of Transmission Belt	1300 mm
Maximum Load	≤180 kg (Adequate distribution)
Wire Resolution	40 AWG (0.0787mm metal wire)
Space Definition	Horizontal Φ1.0mm \ Vertical Φ2.0mm
Penetrate Definition	34 AWG
Penetration	40mm Steel board
Monitor	17 inch LED
System Function	High density alarm, Explosive/Drug auxiliary detect, TIP, Luggage counter, System running timer, X-ray emitting timer, Training, 64 times continuous zoom in
Optional Function	Video surveillance system, Bidirection scan, Electrical weighing system, Energy saving mode, Ultrasonic rat repellent
Film Safety	ASA/ISO1600 standard of film safety

X-ray System

Tube Voltage	150 Kv
Cooling	Seal oil cooling / 100%
Single Inspection Dosage Rate	≤1.0 μ Gy
Radiation Leak Dosage	0.1 μ Gy/h (5cm from the surface)

Installation Specification

Package Size	L2200mm × W1135mm × H1515mm
Console Desk Size	L830mm × W800mm × H1330mm
Package Weight	680KG+105KG (Console desk)
Power Consumption	1 kVA
Noise	53.8 dB(A)

Dimension

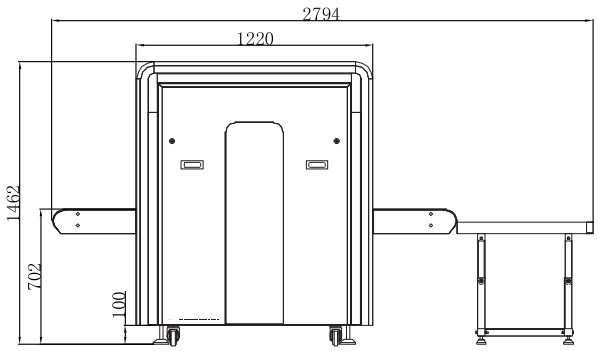

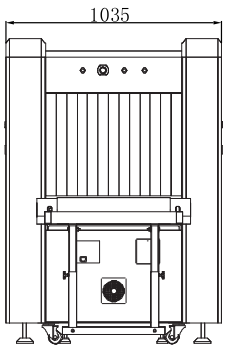

More details

ZKTECO CO.,LTD.
www.zkteco.com
E-mail: sales@zkteco.com

© Copyright 2016. ZKTECO CO., LTD. ZKTeco Logo is a registered trademark of ZKTeco or a related company. All other product and company names mentioned are used for identification purposes only and may be the trademarks of their respective owners. All specifications are subject to change without notice. All rights reserved.